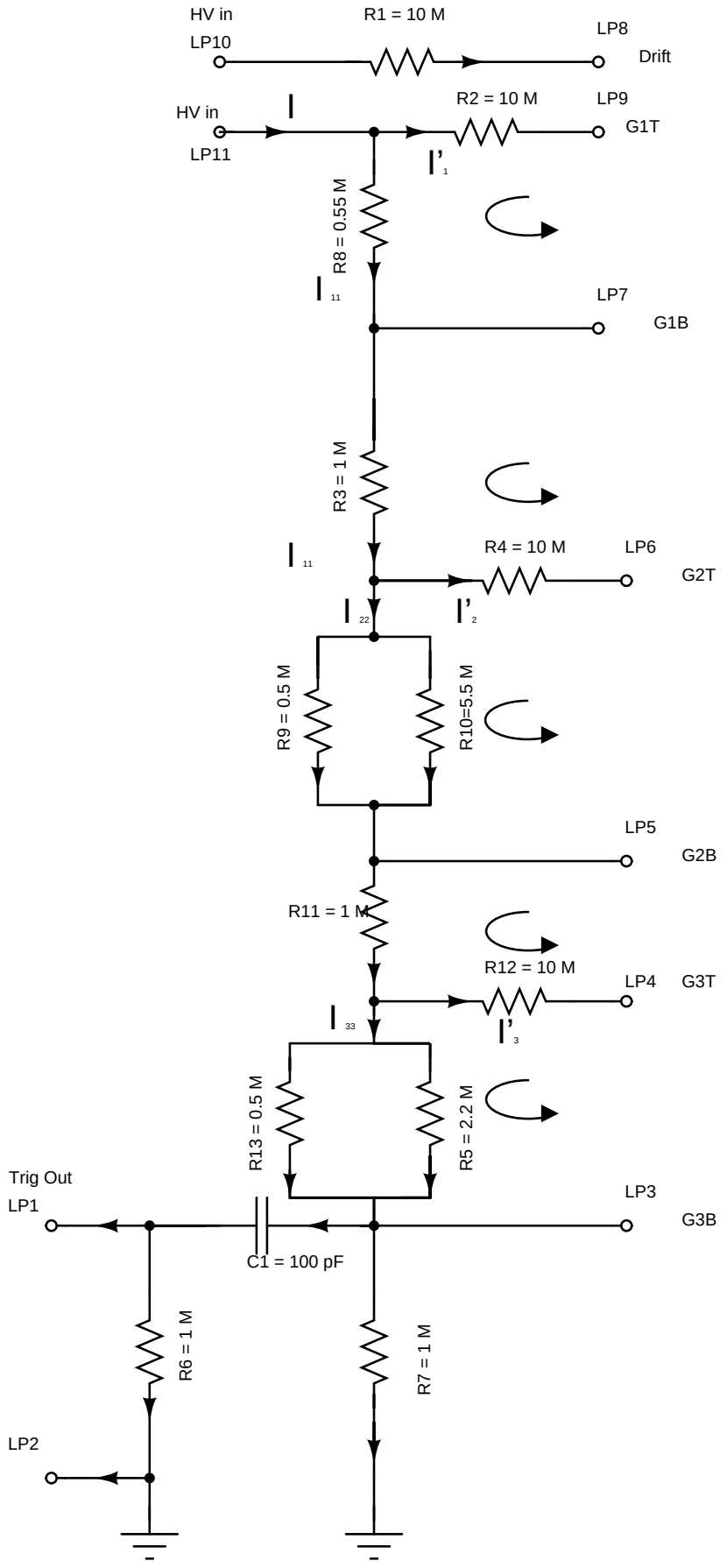
HV in
LP10
R1 = 10 M
LP8
Drift
HV in
LP11
I
R2 = 10 M
LP9
G1T
I'1
R8 = 0.55 M
I11
LP7
G1B
R3 = 1 M
I11
R4 = 10 M
LP6
G2T
I22
I'2
R9 = 0.5 M
R10=5.5 M
LP5
G2B
R11 = 1 M
R12 = 10 M
LP4
G3T
I33
I'3
R13 = 0.5 M
R5 = 2.2 M
Trig Out
LP1
LP3
G3B
C1 = 100 pF
R6 = 1 M
R7 = 1 M
LP2