REVISIONS				
ZONE	REV.	DESCRIPTION	DATE	APPROVED

NOTES:
1. BREAK ALL EDGES -- NO BURRS.

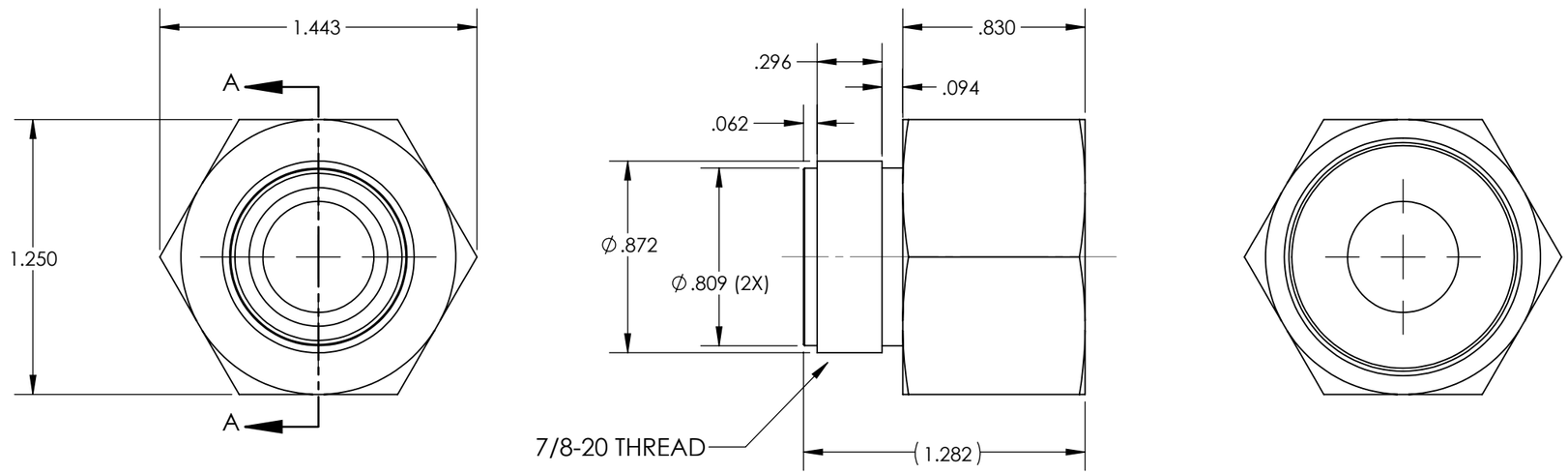

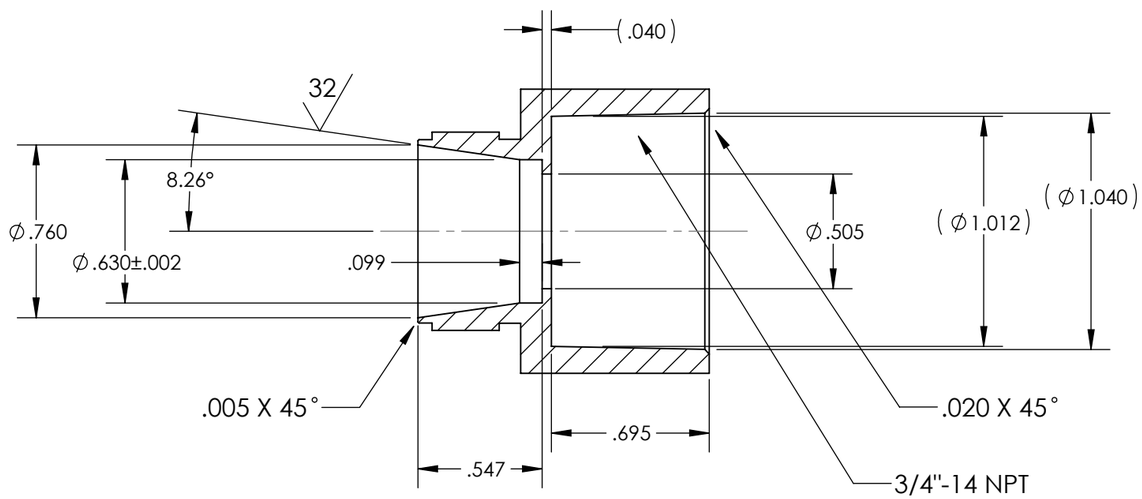

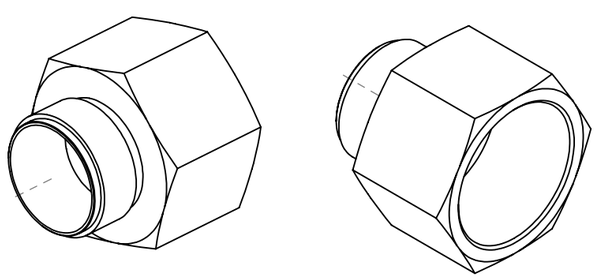

SECTION A-A

NEXT ASSY	USED ON
APPLICATION	

UNLESS OTHERWISE SPECIFIED:
DIMENSIONS ARE IN INCHES
TOLERANCES:
FRACTIONAL ±
ANGULAR: ±0.5
TWO PLACE DECIMAL ±.010
THREE PLACE DECIMAL ±.005

INTERPRET GEOMETRIC TOLERANCING PER:

MATERIAL 304 STAINLESS STEEL

FINISH N/A

DO NOT SCALE DRAWING

	NAME	DATE
DRAWN	DTI	9-14-11
CHECKED		
ENG APPR.		
MFG APPR.		
Q.A.		

COMMENTS:
FITTING MAIN BODY

PROPRIETARY AND CONFIDENTIAL
THE INFORMATION CONTAINED IN THIS DRAWING IS THE SOLE PROPERTY OF EMPIRE MAGNETICS, INC. ANY REPRODUCTION IN PART OR AS A WHOLE WITHOUT THE WRITTEN PERMISSION OF EMPIRE MAGNETICS, INC. IS PROHIBITED.

EMPIRE MAGNETICS, INC.
ROHNERT PARK, CA 94928

TITLE:
MAIN FITTING BODY

SIZE	DWG. NO.	REV
B	10-0000-0056	

SCALE: 1.5:1 SHEET 1 OF 1